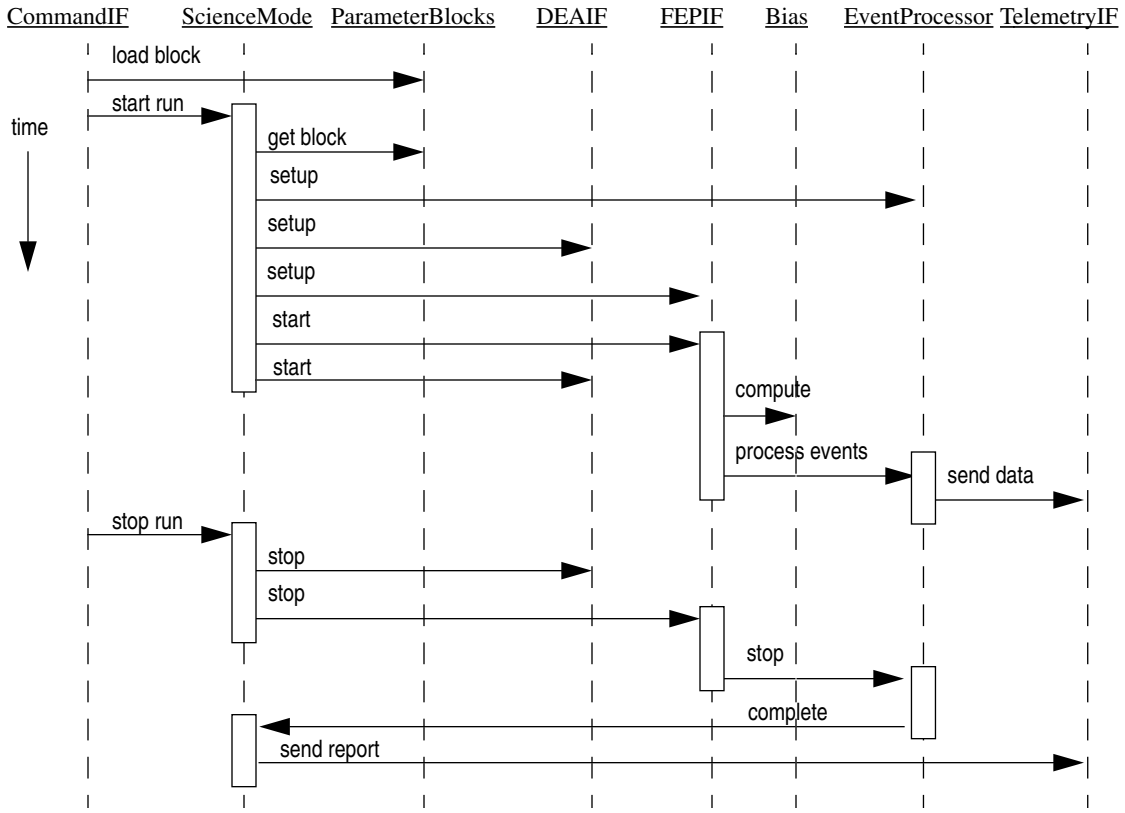
CommandIF
ScienceMode
ParameterBlocks
DEAIF
FEPIF
Bias
EventProcessor
TelemetryIF
time
load block
start run
get block
setup
setup
setup
start
start
compute
process events
send data
stop run
stop
stop
stop
complete
send report