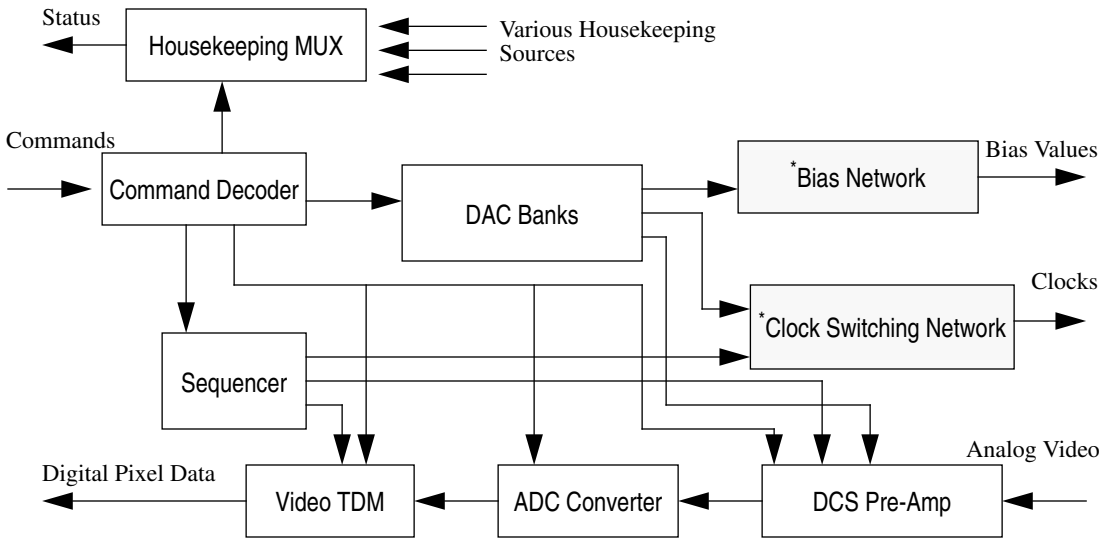

*Shaded boxes are not directly commandable by the software